HTS System AG

Vineyards Frost Protection

Application guide

Intelligent solutions
with lasting effect

Visit www.htsag.ch

DEVI® by Danfoss

HTS System AG

HTS System AG

Index

1. Application overview 4
2. System description 5
3. System design 6
   3.1 Heat loss calculation 6
   3.2 System output 6
   3.3 Product selection 7
      3.3.1 Heating cable selection 7
      3.3.2 Thermostats/controllers 9
      3.3.3 Accessories 11
   3.4 Installation guide 12
4. Safety instruction 13
   4.1 DO's 13
   4.2 DON'Ts 13
5. Case stories 14
6. Technical support 14

Our quality management system **certifications and compliances**

ISO 9001 TS 16949 ISO 14001

Along with full compliance with EU directives and product approvals

Solve the challenge of vine growers with an Electric Heating system

Electric Heating by Danfoss is a symbiosis of long history formed by 2 brands DEVI and Danfoss united under 1 company umbrella.

It derives from DEVI brand that was established in Copenhagen, Denmark, in 1942. As from January 1st 2003 DEVI has become a part of the Danfoss Group - Denmark's largest industrial Group.

Danfoss is one of the world's leading companies within heating, cooling and air conditioning. The Danfoss Group has more than 23.000 employees and serves customers in more than 100 countries. The development of electric heating systems takes place in Denmark, where the head office is situated while heating elements (cables and mats) are manufactured by Danfoss in EU.

Electric Heating is an energy efficient system using electric heating cables to protect vines against frost damage

This design guide presents our recommendations for design and installation of Vineyards Frost Protection system. It provides guidance for a heating cable layout, electric data and system configurations.

Following our recommendations will ensure energy efficient, reliable and maintenance free solution for constant wattage heating cables with 20 year warranty.

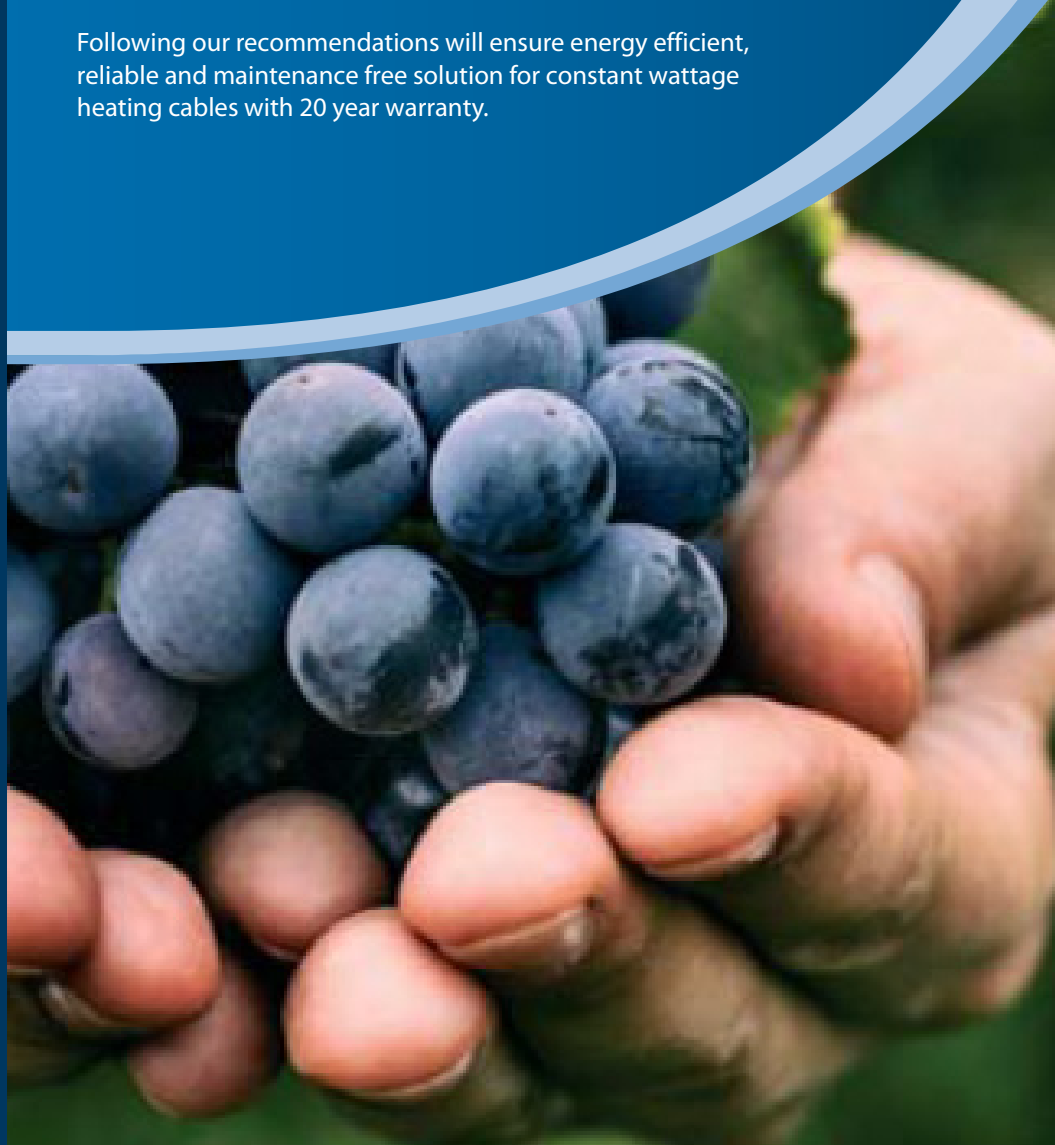

1. Application overview

Every year vine growers from different regions face a problem of late frosts. They often happen in April - May when buds start blossoming.Late spring frosts are one of the greatest challenges vine growers are facing. Non-heated vines can suffer considerable inflorescence damages (up to 50%), whilst heated vines will have dramatically improved protection of harvest loss or damage and reduce the losses to approximately 13-20%.

Worldwide, the grape and wine industry rely on three main alternatives for frost protection: frost fans, sprinklers, and candles.

Electric Heating solves the challenge with energy efficient systems using Electric Heating cables to protect vines against frost damage.

A green (without CO2 emissions) and sustainable lifetime solution. Highly economic due to low energy consumption during the frosts period.

- Protected against chemical fertilizers;
- Extremely-high pulling strength (special tractors coward the vineyards, while knocking the fruits);
- Accurate power design (W) according to requested needs;
- 5 or 20 years warranty.

Heating system can provide frost protection ONLY in spring season when the bud grows and NOT in wintertime!

Benefits

- An energy-efficient solution with electric heating cables.
- Easy, fast and reliable installation.
- A customized approach to meet client's needs, area of vinery and number of rows.
- Proven high saving compared to the existing methods.
- A sustainable solution for a green and clean future through low energy consumption during the frost period.
- Tough cable outer sheath (resistant to weather and UV)

2. System description

Electric Heating solves the challenge with energy efficient systems using Electric Heating cables to protect vines against spring frost damage. The heating cables by DEVI are installed and fixed on metal wire along the grapes. The system is controlled automatically by temperature sensors connected to the controller.

Non-heated vines can suffer considerable inflorescence (bud) losses. Number of berries can decrease by 3 times or completely disappear!

Different grape varieties can withstand frosts different.

A dormant bud is reasonably frost hardy, it can survive frost down to -3,5 °C (Pinot Noir).

As the bud grows the water contents raise in the bud and it becomes more susceptible to frost -1,1 °C can damage it (Pinot Noir).

We offer an energy-efficient solution with our electric heating cables for frost protection of the vines.

The concept involves installation of heating cable along the main trellising wire of grapevines.

- Frosts protection in spring time (from 2 up to 7 days)
- The ambient temperature is -2…-8 °C
- Most susceptible to frost vineyards are located in the lowlands/valleys (low area of land)

Depending on heating level, vintage losses may be decreased

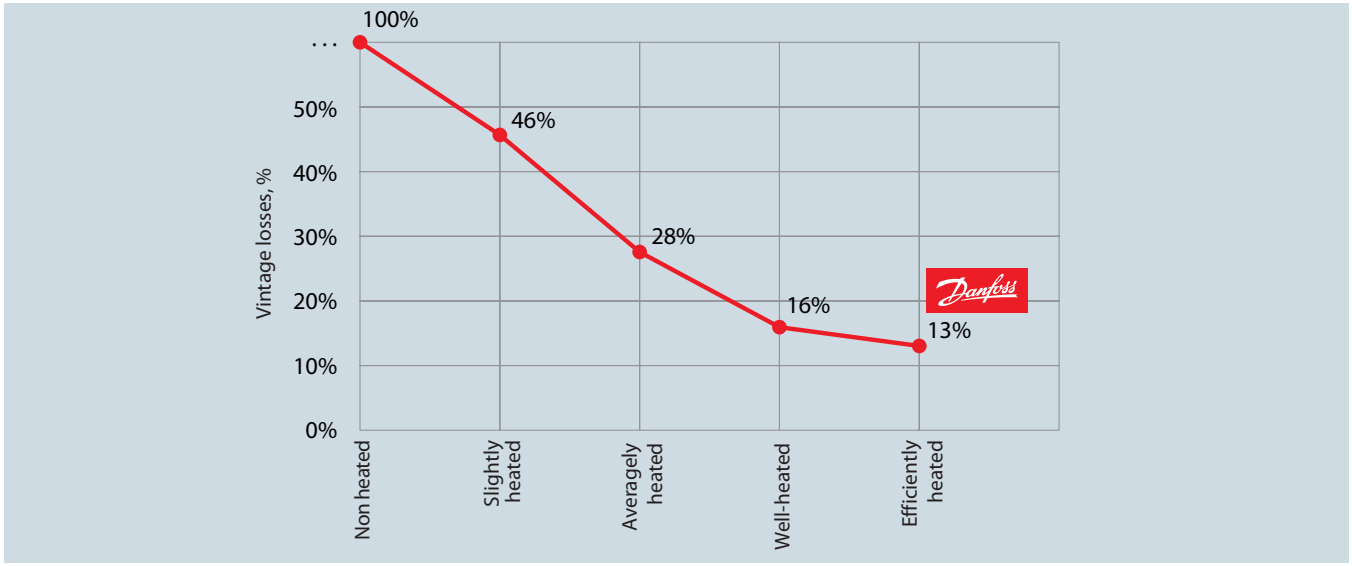

Common view of electric heating system for vineyards

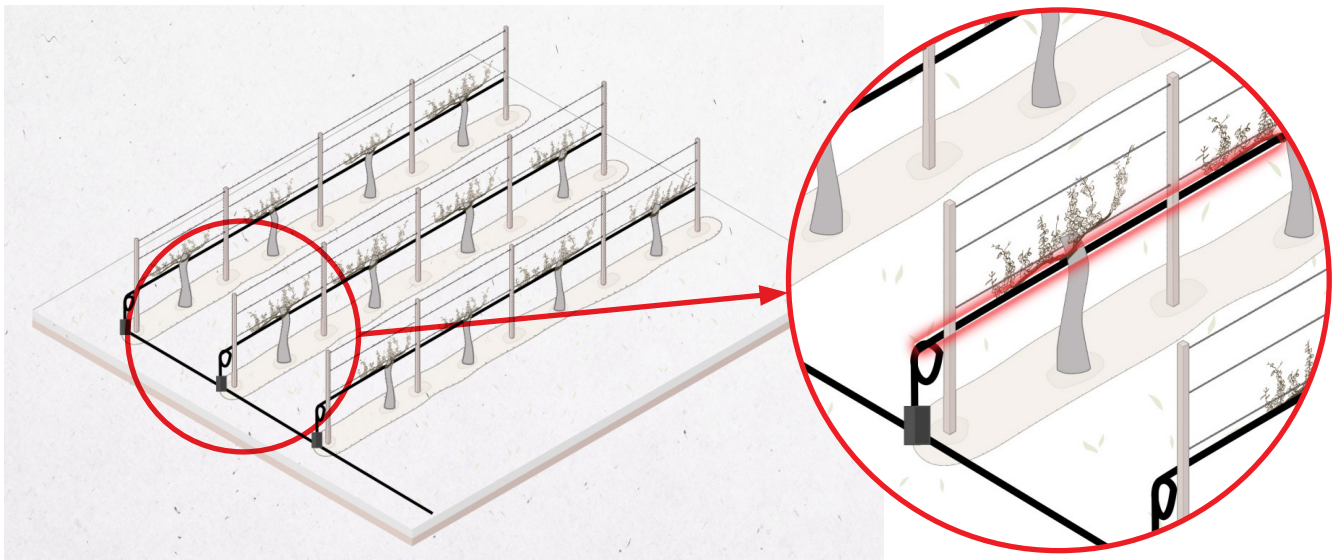

3. System design

Following pages provide an easy design guide for selection of a Vineyards frost protection system.
The recommendations are provided relates to heating cables, as well as thermostats and accessories.

3.1 Heat loss calculation

Linear output of a heating cable (W/m), which is installed for main vine branch, should be at least the same as heat loss (Q, W/m).

In order to calculate heat losses and design the system, we need to know:

- Minimum ambient temperature in spring frost period **(-2…-8 °C)**;
- Grape sort. For different sorts we need to maintain different temperature **(+1…+5 °C)**. The temperature must be checked with vineyard owner and specified for the project calculation;
- Length and numbers of vineyard rows;
- Available total load on site, kW;
- Voltage (230, 400 V).

For **medium weather conditions***, in order to increase temperature by **1 °C** needs power of approx. **1 Watt**.

In average can be installed from **10 up to 20 W/m** for each main branch of grapevine.

Example.

Location is France and ambient temperature during frosts period is -8 °C. Grape sort is Pinot Noir and we can maintain +2 °C near the main vine branch.

According to the data above:

$$q_{sys} = \Delta t_{main.-amb.} \cdot p$$

$$\Delta t_{main.-amb.} = t_{main.} - t_{amb.} = +2 - (-8) = 10\ °C$$

$$q_{sys} = 10 \cdot 1 = 10\ W/m$$

q_{sys} – heat loss of the system, W/m.
$t_{main.}$ – maintain temperature near the vines, °C.
$t_{amb.}$ – ambient temperature, °C.
p – output coefficient, W/(m · °C).

** Medium conditions are the following: wind velocity is from 4-6 m/s. But it always depends on local weather conditions!*

3.2 System output

The heat required for vineyards frost protection depends on the following main factors:

- Weather conditions (min. temperature, wind speed, humidity, altitude)
- Electrical data (voltage, power, control requirements)
- System performance expectations
- Safety factor

With data from previous example will calculate linear output of heating cable:

$$p_{sys} = q_{sys} \cdot 1{,}3$$

$$p_{sys} = 10 \cdot 1{,}3 = 13\ W/m$$

However, in some locations the **wind is present** at any time of the day. I such cases we need to add influences of wind velocity.
Heat transfer coefficient should be considered according to wind velocity.

Safety factor is very important and depends on the following parameters:

- Tolerance of heating cable resistance: +10%...-5%;
- Cable length tolerance: +2%...-2%;
- Supply voltage: +5%...-5%.

} **Totally can be up to 30%**

Average values of linier outputs depending on different wind velocity:

Wind velocity	2 m/s	3 m/s	4 m/s	5 m/s	6 m/s
Linear output*	10,8 W/m	11,4 W/m	14 W/m	16,6 W/m	19,2 W/m

** Note that values in the table above are calculated without influence of altitude, Nusselt and Prandtl criterions. For more info:* ***info@htsag.ch***

Total system output depends on numbers and length of vine rows and should be calculated in order to choose appropriate load equipment.

$$P_{tot} = p_{sys} \cdot n \cdot L_r$$

$$P_{tot} = 13 \cdot 10 \cdot 100 = 13000\ Watts$$

p_{tot} – total output of the system, W;
p_{sys} – linear output of the system, W/m;
n – vine row numbers;
L_r – vine rows length, m.

3.3 Product selection

This section will show how to choose the correct heating element, control device and what accessories to use for the installation.

The electric heating system product portfolio for the Vineyards Frost protection consists of three major components:

- Heating element – heating cable with constant wattage ready-made units or drum goods;
- Controller with a temperature sensor or a controller with both temperature and moisture sensors;
- Fixing elements and accessories.

DEVI frost protection systems can be fully automated which eliminates the need for field personnel during frost events.

Also, the prefabricated cold connections in DEVI factories offer considerable time savings in the deployment of frost protection systems. Connection to the electrical cabinet is pretty easy due to DIN rail construction.

3.3.1 Heating cable selection

Most of cables are manufactured as ready-made heating elements with a specific length, with connecting power supply cable (cold lead or cold tail) and sealed joints (connection muffs or end terminals).

It is also possible to choose special drum goods which can be customized for the specific project.

Main rules how to choose suitable heating cable:

- Calculate heat loss;
- Add safety factor to heat loss (usually + 30% or 1,3);
- Outer sheath of heating cable MUST be UV protected;
- Check voltage supply and choose suitable heating cable: 230 V or 400 V;
- Choose product type: ready-made units or drum goods (usually depends on specific row length and linear output).

Range of the heating cables linear output for vineyards frost protection is usually between 10 and 20 W/m (Watt per linear meter).

Ready-made heating cables
The heating cable offered for the application is constant wattage cable with an extremely high-quality. Its round profile and robust construction ensures a fast, simple and safe installation in multiple applications.

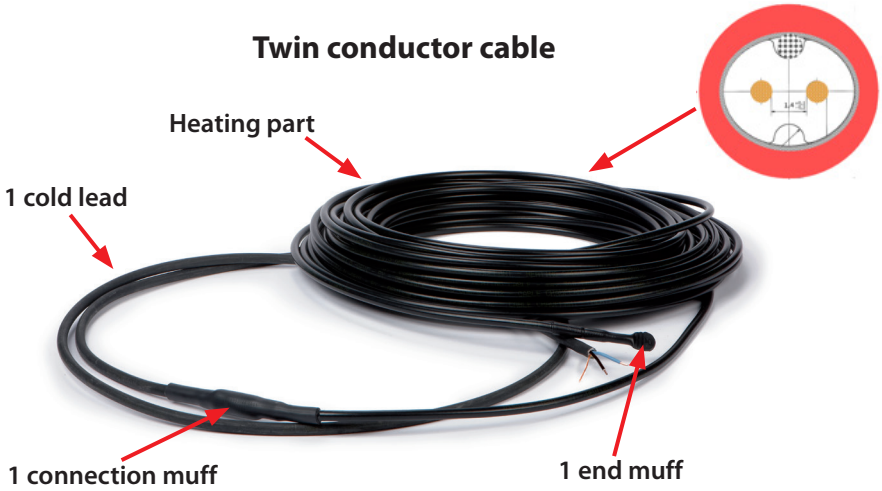

Product	Linear output, W/m	Type	Max. permissible use temp., °C	Cable dimensions, mm	Conductor insulation	Outer sheath	Cold lead	IP class
DEVIsafe™ 20T	20	Twin conductor	60	6,9	XLPE	PVC UV protected	One 2,3 m DTCL	IPX7
DEVIsnow™ 20T	20	Twin conductor	70	7	FEP	PVC UV protected	One 2,3 m DTCL	IPX7

Drum goods

- not ready-made cables, only heating part;
- shielded/screened cables;
- MUST be done separate calculation depending on cable length, linear output, voltage, ohmic value before offering the cables to customers;
- **please use calculation tool or contact local sales representative or info@htsag.ch**

Drum goods can be customized for the specific project depending on voltage, required output, length of heating cable and length of cold leads.

Cable calculation formulas:

$$L = U / \sqrt{(p \cdot r)}$$
$$r = U^2 / (L^2 \cdot p)$$
$$p = U^2 / (L^2 \cdot r)$$

where:
L – length of heating cable (m);
U – supply voltage (V);
p – linear output (W/m);
r – linear resistance (Ohm/m).

Heating part

Product	Linear output, W/m	Type	Max. permissible use temp., °C	Cable dimensions, mm	Conductor insulation	Outer sheath	Cold lead	IP class
DEVIsnow™ Drum Goods	Separate calculation	Twin conductor	60	7	FEP	PVC UV protected	No	IPX7

Note: *It is the full responsibility of the installer/designer to use proper cold lead dimensioned for the purpose and assembly sets that establish sufficient mechanical strength, flammability resistance and water tightness - and to design the heating unit with correct output for the specific application to avoid overheating of the cable or building materials.*

To ensure a long life-time, all cables are minutely inspected including tests for Ohmic resistance, high voltage and material controls to ensure the quality.

Possible solutions for drum goods are already presented in the table below. Cable lengths depend on ambient temperature, linear output and voltage. Always contact technical department in order to check your own calculations.

How to use the table below?

Based on known minimum protected temperature, linear output of the cable, voltage and resistance, the actual length of the cable can be found (and opposite):

1. Find minimum protected temperature in the top bar of the table (e.g. -4 °C);
2. Choose suitable linear output of the cable based on heat loss calculation (e.g. 9 W/m);
3. Find suitable voltage (e.g. 400 V);
4. Choose resistance value (e.g. 1,519 Ohm/m);
5. Follow the vertical and horizontal lines, until they meet.

Description	Resistance Ohm/m	Minimum protected temperature															
		-3°C		-4°C ①		-5°C		-6°C		-7°C		-8°C		-9°C		-10°C	
		Cable length at 8 W/m (-3°C)		Cable length at 9 W/m (-4°C) ②		Cable length at 10 W/m (-5°C)		Cable length at 11 W/m (-6°C)		Cable length at 12 W/m (-7°C)		Cable length at 13 W/m (-8°C)		Cable length at 14 W/m (-9°C)		Cable length at 15 W/m (-10°C)	
		230 V	400 V	230 V	400 V ③	230 V	400 V	230 V	400 V	230 V	400 V	230 V	400 V	230 V	400 V	230 V	400 V
DEVIsnow 9,36 ohm/m	9,36	27	46	25	44	24	41	23	39	22	38	21	36	20	35	19	34
DEVIsnow 4,19 ohm/m	4,19	40	69	37	65	36	62	34	59	32	56	31	54	30	52	29	50
DEVIsnow 2,368 ohm/m	2,368	53	92	50	87	47	82	45	78	43	75	41	72	40	69	39	67
DEVIsnow 1,519 ohm/m	④ 1,519	86	149	82	142	77	133	73	127	70	122	67	117	65	112	62	108
DEVIsnow 1,057 ohm/m	1,057	79	138	75	130	71	123	67	117	65	112	62	108	60	104	58	100
DEVIsnow 0,735 ohm/m	0,735	95	165	89	156	85	148	81	141	77	135	74	129	72	125	69	120
DEVIsnow 0,567 ohm/m	0,567	108	188	102	177	97	168	92	160	88	153	85	147	82	142	79	137
DEVIsnow 0,451 ohm/m	0,451	121	211	114	199	108	188	103	180	99	172	95	165	92	159	88	154
DEVIsnow 0,367 ohm/m	0,367	134	233	127	220	120	209	114	199	110	191	105	183	101	176	98	170
DEVIsnow 0,257 ohm/m	0,257	160	279	151	263	143	250	137	238	131	228	126	219	121	211	117	204
DEVIsnow 0,19 ohm/m	0,19	187	324	176	306	167	290	159	277	152	265	146	255	141	245	136	237
DEVIsnow 0,146 ohm/m	0,146	213	370	201	349	190	331	181	316	174	302	167	290	161	280	155	270
DEVIsnow 0,115 ohm/m	0,115	240	417	226	393	214	373	204	356	196	341	188	327	181	315	175	305
DEVIsnow 0,092 ohm/m	0,092	268	466	253	440	240	417	229	398	219	381	210	366	203	352	196	341
DEVIsnow 0,07 ohm/m	0,07	307	535	290	504	275	478	262	456	251	436	241	419	232	404	224	390
DEVIsnow 0,055 ohm/m	0,055	347	603	327	569	310	539	296	514	283	492	272	473	262	456	253	440

Table can be used in opposite way where, based on length, voltage and linear output, a suitable cable from the product range can be found.

3.3.2 Thermostats/controllers

Thermostats and controllers are fitted with a complete set of control functions for frost protection systems. It is a combination of multi functionality and temperature control.

The product range of controls is designed for frost protection systems including the following:

- **simple electronic thermostats;**
- **digital controllers.**

Line of **simple electronic thermostats** to be installed in electric cabinets with DIN rail attachment. To measure and control the desired temperature either a wire sensor (in the set) or an external indoor/outdoor air sensor must be used. The thermostat must be installed via an all-pole disconnection switch. It has a LED indicating showing standby (green light) and heating (red light) periods.

To control simple or low output (less than 3000 Watts) systems, simple thermostats are recommended as a standard solution.

DEVIreg™ 330 (+5…+45 °C) and DEVIreg™ 330 (-10…+10 °C) can be used for such purposes.

Wire sensors should be installed according to specific project data. Minimum one sensor must be used for one heated zone (could be one vineyard row or few rows depending on field size and location). Always contact local sales representative or info@htsag.ch in order to get technical help.

Find basic thermostat connections below.

Thermostat connection of twin conductor heating cables (max. 3680 Watts at 230 V).

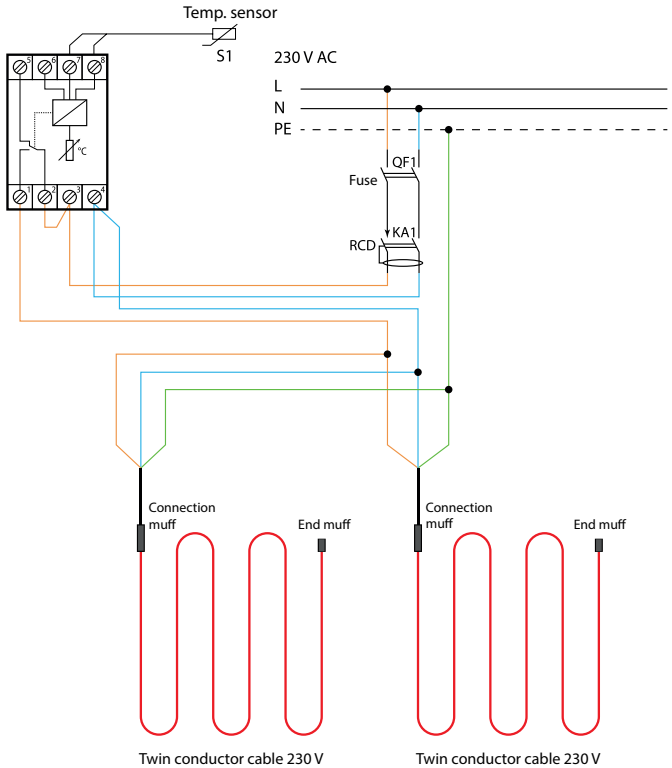

Thermostats connections of twin conductor heating cables (400 V) via contactor.

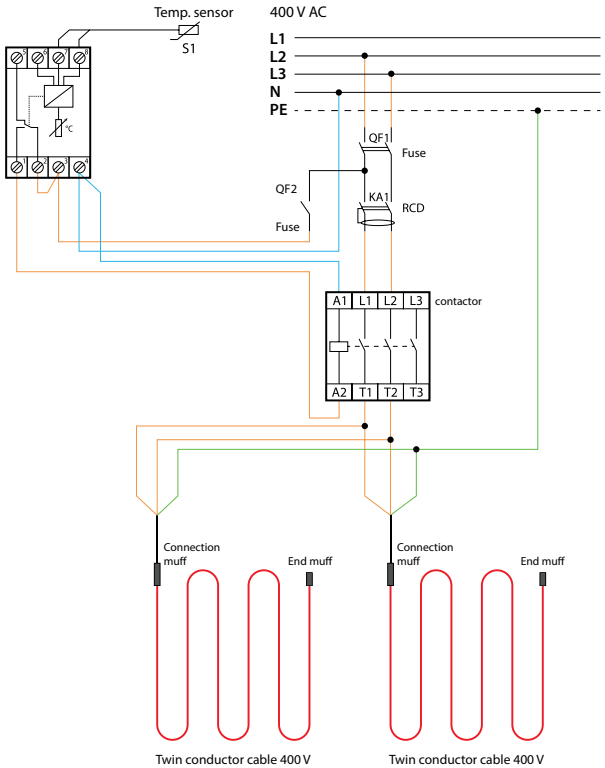

For more connection schemes please contact **info@htsag.ch**

Line of **digital controllers** have special functions which can be programmed for different purposes.

DEVIreg™ Multi is 7 channel electronic programmable controller to be installed on DIN rail.

Every channel can be individually set up with three control modes – with temperature sensor, time proportional power regulation without sensor and manually on/off with time limitation.

Main functions of it are next:

- 3 control modes:
  - with temperature sensor
  - time proportional regulation
  - manual On/Off with time limitation
- 7 channel controller;
- DIN rail;
- Modbus interface for BMS control;
- Cable failure monitoring (alarm);
- The wide temp range.

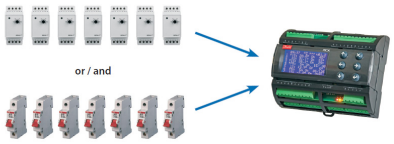

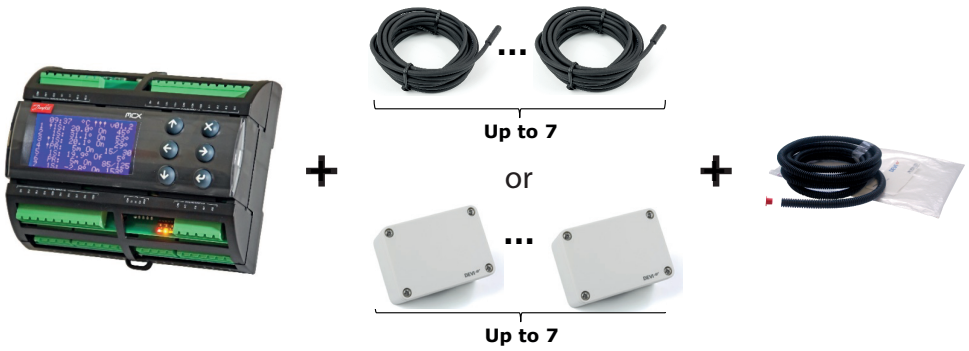

Find basic thermostat connections below.

Thermostat connection of twin conductor heating cables (230 V).

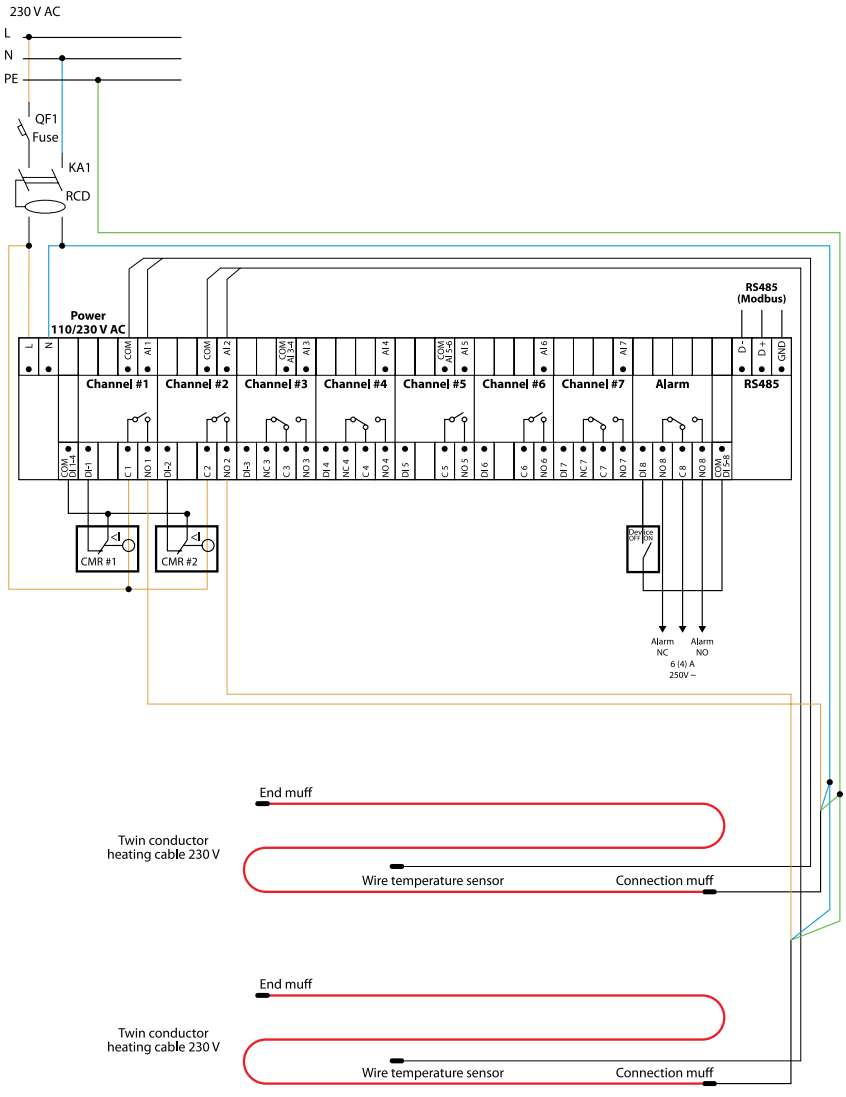

For more connection schemes please contact **info@htsag.ch**

The ECL Comfort 310 is an electronic weather compensated temperature controller. The weather compensated heating system increases the comfort level and saves energy.

Main functions and benefits:
- Easy installation;
- Optimized performance;
- Easy modifications;
- Alarm function;
- Different configurations;
- 24/7 overview of the system;
- Ability to make log of the individual sensors;
- Remote control;
- For mounting on wall and DIN rail.

Interface example:

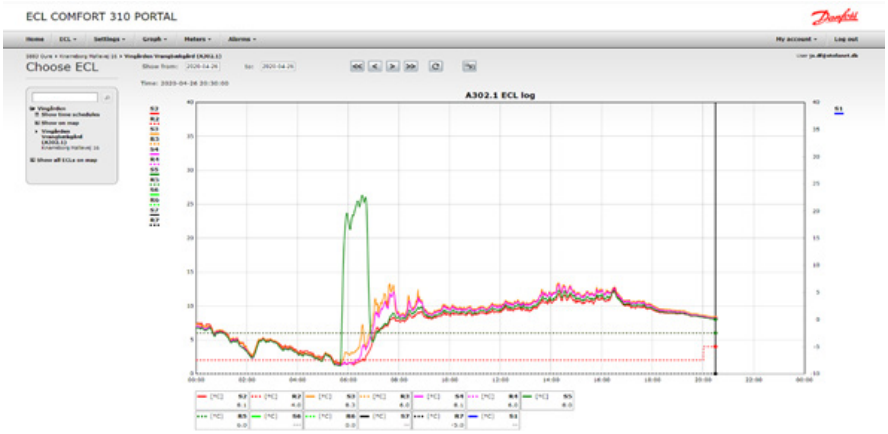

Product	Resistive load, at 230V, Amps	Sensor type	Temperature range, °C	Hysteresis, °C	BMS	IP class	Installation
DEVIreg™ 330 (-10…+10 °C)	16	Wire	-10…+10	±0,2	No	IP20	DIN rail
DEVIreg™ 330 (+5…+45 °C)	16	Wire/Air optional	+5…+45	±0,2	No	IP20	DIN rail
DEVIsnow™ Multi	10 (2 channels) 6 (5 channels)	Wire/Air optional	-50…+200	±0,2…9	Yes	IP40	DIN rail
ECL Comfort 310	4 (2 x CO and 2 x NC)	Wire	-50…+200		Yes		On wall

3.3.3 Accessories

DEVI range has all necessary accessories for fixing, measurement and connection in order to provide full project specification.

In order to find all accessories please refer to Product Catalogue or visit **www.devi.com.**

Cable ties Plastic ties for fixing heating cables.	**Wire sensors** Wire sensors for different temperature range.	**Air sensor** Outdoor air sensor with IP44	**Plastic conduit pipe** Plastic conduit pipe for wire sensors	**DTCL Cold leads** Different cold leads with different cross sections and construction are available for ordering
End termination repair set DEVIcrimp™ CS-2C assembly kit dk 2-cond.	**Heating cable to cold lead repair set** DEVIcrimp™ for DEVIsnow™	**Heating cable to heating cable repair set** DEVIcrimp™ ass/repair kit 2-cond. CS-2A/CS-2B	**Heating cable to cold lead/ heating cable repair set** Repair kit cables 2 cond. Concrete/støbesæt	

Note: always use only authorized accessories!
For more details please use Product Catalogue or **info@htsag.ch**

3.4 Installation guide

After product selection proper installation should be done. Always use the following rules during the installation process:

- Heating cable should be installed on metal wire near the main branch of grapevines, the closer the cable is to the buds the more heat it will exert on the buds;;
- One cable line for one row of vineyard. All cables should be connected in parallel;
- Heating cable can be fixed by plastic ties;
- Distance between cable and vines branch is maximum 0-4 cm;
- Control system should have temperature sensors (wire sensors);
- Install sensors where the temperature is estimated to be representative for the whole installation, where 2 sensors are needed for the thermostat/controller please install at the estimated extreme points (coldest and hottest);
- Wire sensors should be installed in plastic conduit pipe (avoid direct contact of sun rays) near the main branch of grapevines;
- Alarm should be installed in order to check all cables which can be damaged by grape secateurs, tractors, etc.

1. Fix one line of the heating cable to metal wire by plastic ties.

2. Heating cables should be connected to thermostat/controller according to local norms and regulations. Contact **info@htsag.ch** for all technical information about connections.

3. Install wire sensor in plastic conduit pipe and place it in coldest place near main branch of grapevines.

4. It is strongly recommended to install alarm system in order to check the integrity of the cables in real-time and before the frost season

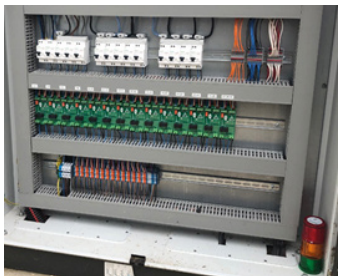

As a result you will get reliable frost protection heating system providing a stable harvest.

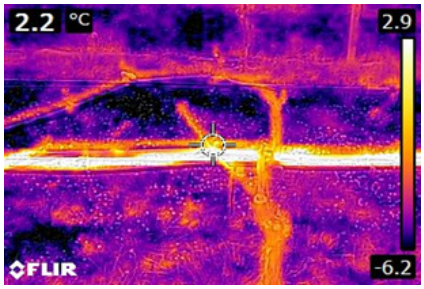

4. Safety instruction

Heating cables must always be installed according to local regulations and wiring rules as well as the guidelines in this installation manual.

De-energize all power circuits before installation and service.

Residual current device (RCD) protection is required.RCD trip rating is max.30 mA.

The screen from each heating cable must be connected to earthing terminal in accordance with local electricity regulations.

Heating cables must be connected via a switch providing all pole disconnection.

The heating cable must be equipped with a correctly sized fuse or circuit breaker according to local regulations.

Never exceed the maximum heat density (W/m or W/m^2) for the actual application.

It is strongly recommended to use the heating cable together with an appropriate thermostat to secure against overheating.

The presence of a heating cable must be made evident by affixing caution signs in the fuse box and in the distribution board or markings at the power connection fittings and/or frequently along the circuit line where clearly visible (tracing) must be stated in any electrical documentation following the installation.

4.1 DO's

- For installation of cable and thermostat/controller, always refer to the local regulations/legislations and respective manuals;
- Remember to fill out the warranty certificate with the required information as this will not be valid otherwise;
- Carefully complete the installation, the cable can break when overloaded;
- If any doubt arises consult you manual or local DEVI department;
- Ensure that the cable is sufficiently fixed and mounted according to the manual;
- Ensure that warning labels and stickers (potentially tape) with warning text is used to inform about the heat traced cable;
- Install sensors where the temperature is estimated to be representative for the whole installation, where 2 sensors are needed for the thermostat/ controller please install at the estimated extreme points (coldest and hottest);
- To get the best performance of the system and avoid failures it is necessary to follow the installation descriptions;
- To get the best performance of the system it is strictly necessary to calculate the correct heat losses. Using this knowledge the cable with right output can be chosen;
- Plan every installation step and fixing point of the frost protection system ahead of time and ensure that the "run" is proper and possible;
- Ensure sensors are connected according to the applicable installation guide and/or application guide.

4.2 DON'Ts

- Never make an installation without thermostat/controller;
- Never install cables where the heat can't be dissipated, even with a self-limiting cable the output will never become zero and the cable can overheat;
- Never let unauthorized personnel install controllers/thermostats or heating elements;
- Never use unauthorized accessories;
- Never use our products (cables, controllers, sensors, etc.) outside provided temperature range.

08098000 & AB392433138239EN-010102 | OCT 18, 2021

Intelligent solutions
with lasting effect

Visit htsag.ch

HTS System AG

Bösch 63, CH-6331 Hünenberg
Tel: +41 41 798 00 98
www.htsag.ch info@htsag.ch